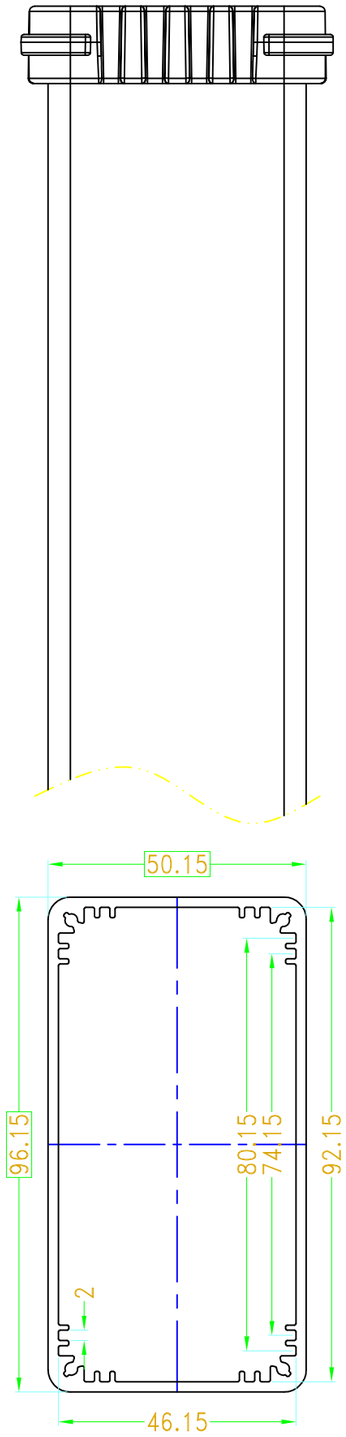

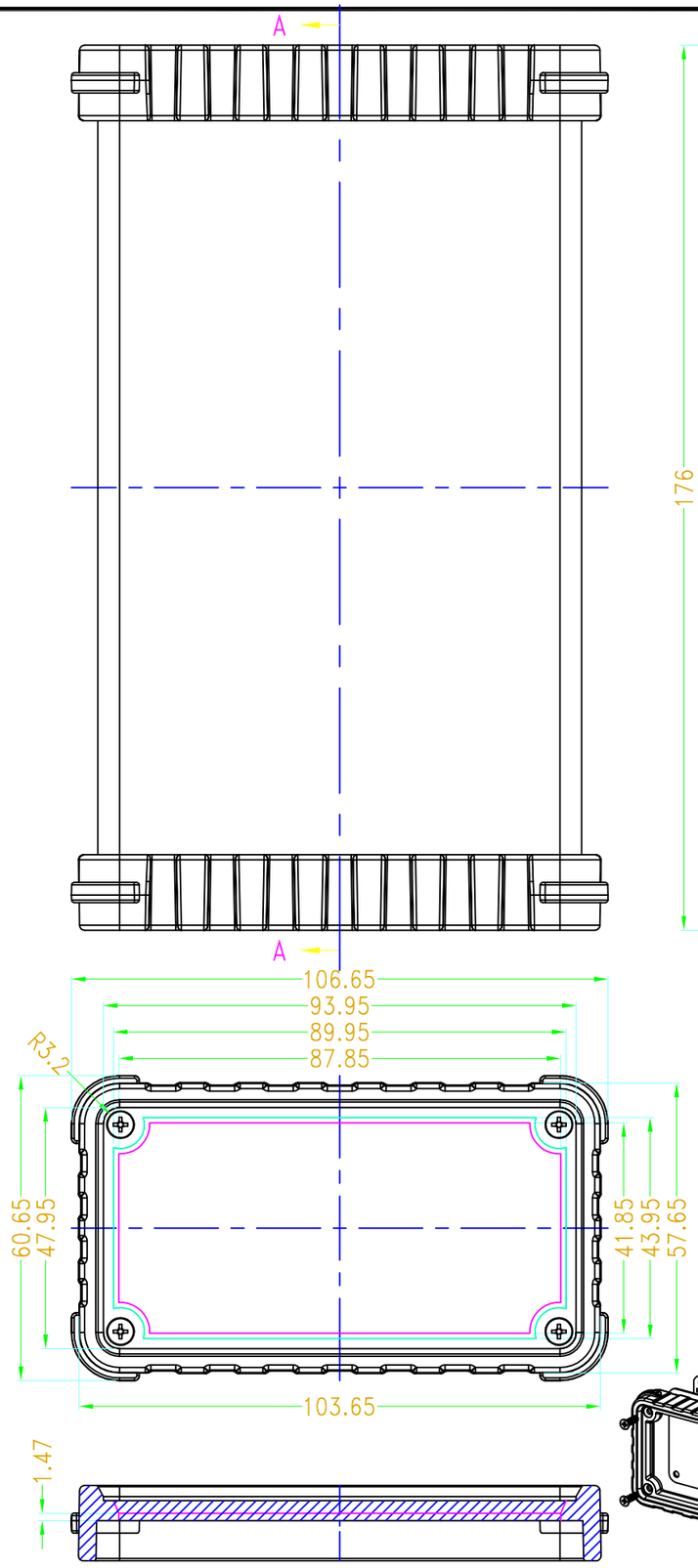

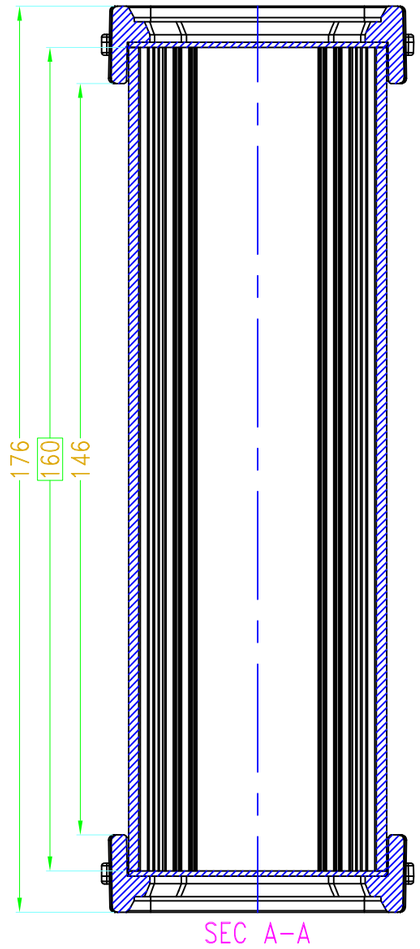

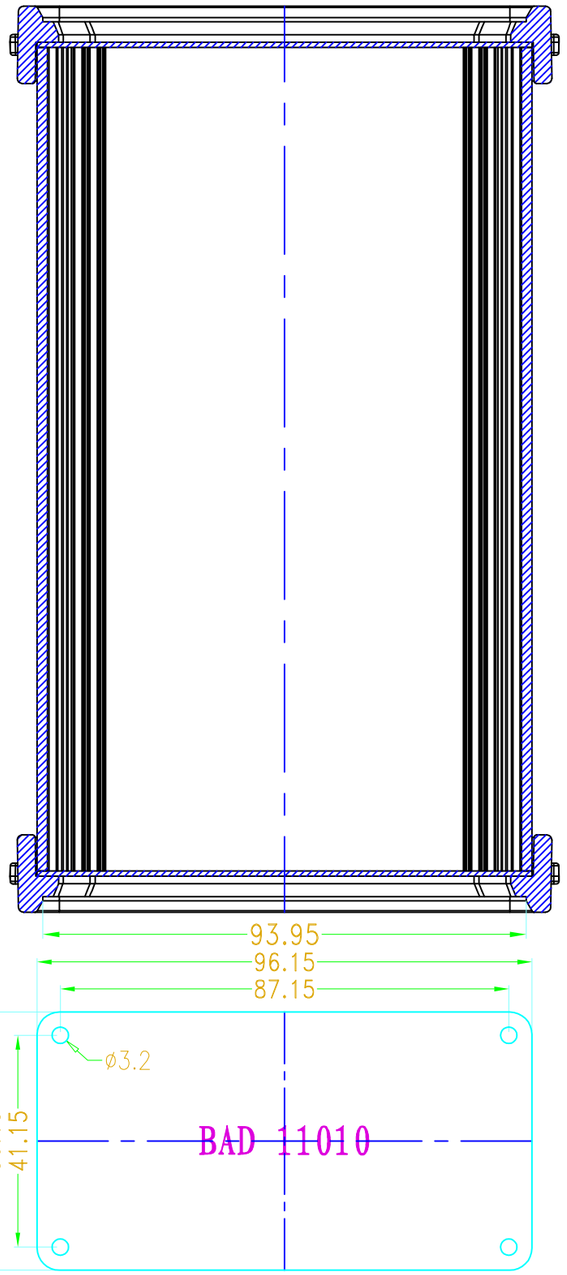

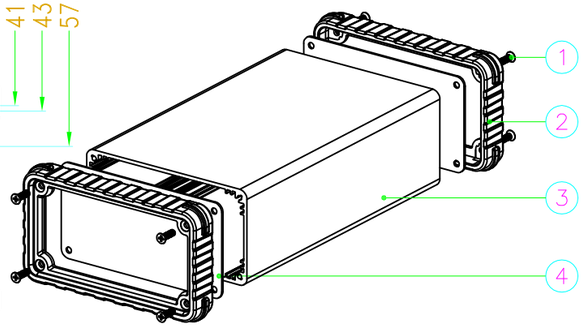

2	panel	SECC	2				
3	Al profile	AL	1				
2	panel	PP+GF+TPE	2				
1	screws	STD	8	KM3.0x10			
Drawing	Auditing	Confirm	Product Name	Aluminum case	Project View		A
			Product Type	BAD 11010-T W160	Drawing Scale	1:1 (MM)	

BAHAR
www.bahar-enclosure.com

BAHAR ENCLOSURE GmbH